THIS COPY IS PROVIDED ON A RESTRICTED BASIS AND IS NOT TO BE USED IN ANY WAY DETRIMENTAL TO THE INTERESTS OF PANDUIT CORP.

PANDUIT PART NUMBER	WEIGHT
WGSK**	.66 LBS (299.4 g)

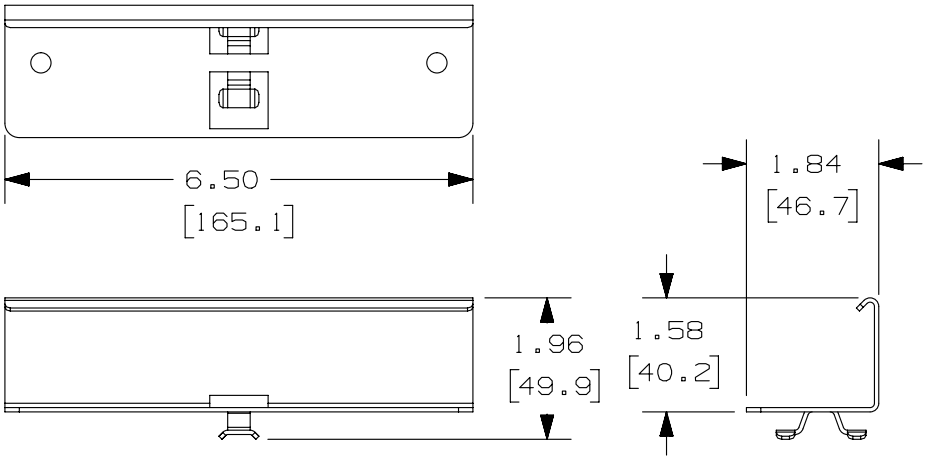

STRUT BRACKET

NOTES:
1. SEE CURRENT CATALOG FOR ADDITIONAL PART SUFFIXES TO INDICATE PACKAGE QUANTITY.
2. THE WYR-GRID STRUT KIT IS USED WITH STRUT TO MAKE A TRAPEZE BRACKET.
3. THE WYR-GRID STRUT KIT PACKAGE CONTAINS A STRUT BRACKET AND A PAIR OF STRUT CLIPS.
   EACH STRUT CLIP CONSIST OF:
   ONE (1) WYR-GRID STRUT CLIP
   ONE (1) 1/4-20 X 7/8 HEX HEAD CAP SCREW
   ONE (1) 1/4 HELICAL SPRING LOCKWASHER
   ONE (1) 1/4-20 CHANNEL NUT
4. ALL DIMENSIONS IN PARENTHESES ARE METRIC.

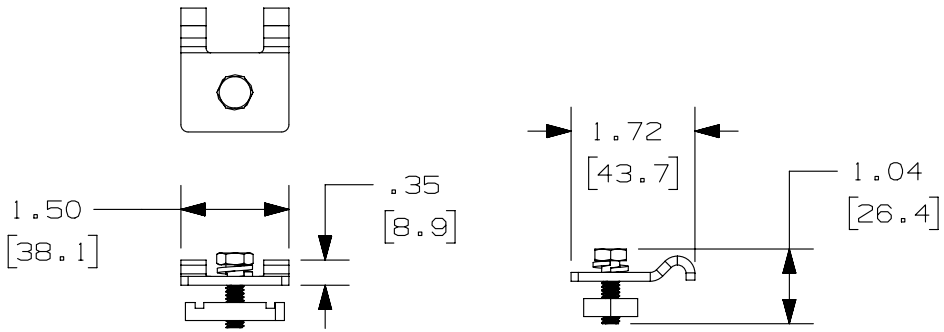

STRUT CLIP

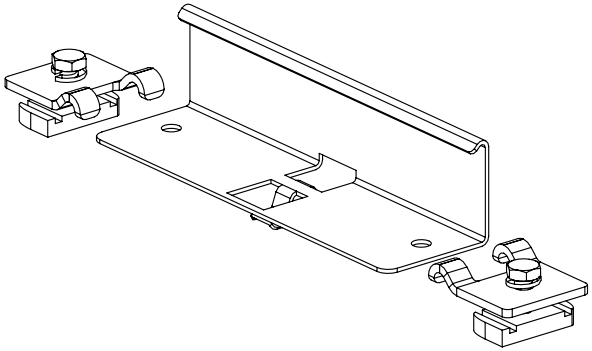

REV	DATE	BY	CHK	APR	DESCRIPTION	ECN
R	02-06-14	SSP	DWW	RN	RELEASED TO PRODUCTION	13D309AA-DC

TITLE
WYR-GRID STRUT KIT (WGSK**)
CUSTOMER DRAWING

ITEM REVISION NAME: 13D309AA/00

DATASET FILE NAME: 13D309AA_DC/00A WGSK**

UNLESS OTHERWISE SPECIFIED, DIMENSIONAL TOLERANCES ARE: IN [mm]
.X ± .XXX ±
.XX ± .05 [1.3] ANGLES ±
THIRD ANGLE PROJECTION

MATERIAL: STEEL

DRAWING NUMBER: 13D309AA-DC

DRAWN BY	DATE	CHK	SCALE		SIZE
SSP	02-06-14	DWW	NONE	SHT 1 OF 1	A