THIS COPY IS PROVIDED ON A RESTRICTED BASIS AND IS NOT TO BE USED IN ANY WAY DETRIMENTAL TO THE INTERESTS OF PANDUIT CORP.

PANDUIT PART NO.	DIMENSIONS			WEIGHT lbs / 10 (grams) / pcs
	"A" (Min)	"B" (Min)	"C"	
CMVDRC	4.72 (119.88)	5.09 (129.29)	0.25 (6.4)	2.51 (1137.2)

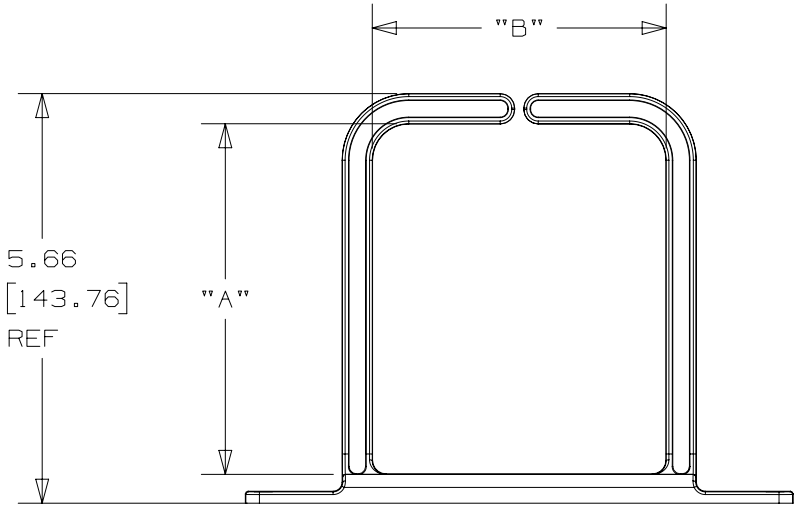

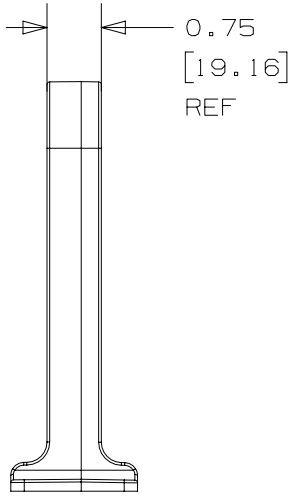

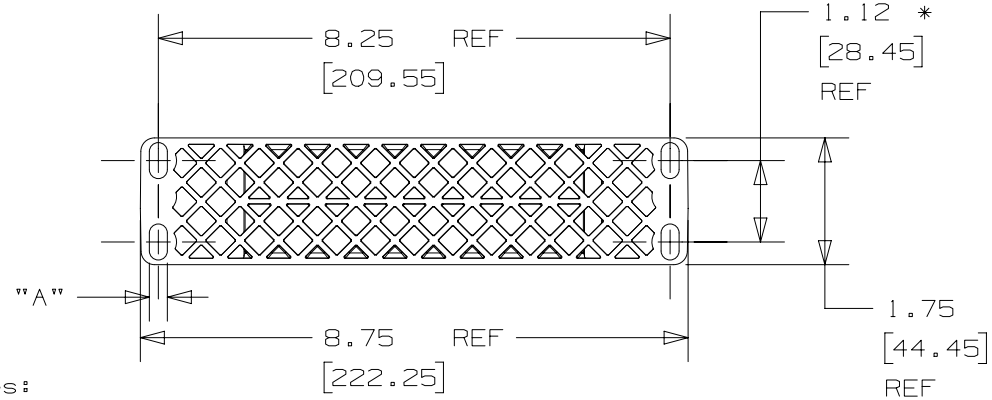

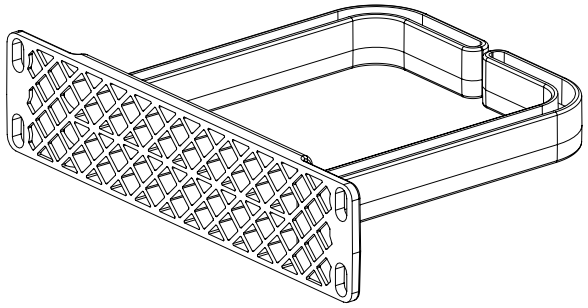

Notes:

* 1. This product is compatible with EIA/TIA hole spacing requirements for rack mounting components.
2. The maximum mounting hardware is 0.236" (6.0 mm) diameter.

TITLE

CABLE MANAGEMENT VERTICAL 'D' RING (CMVDRC)

CUSTOMER DRAWING

ITEM REVISION NAME: 14V456DV/02

DATASET FILE NAME: 14V456DV_DC/02A

UNLESS OTHERWISE SPECIFIED, DIMENSIONAL TOLERANCES ARE:

THIRD ANGLE PROJECTION

MATERIAL: FLAME RETARDANT POLYCARBONATE

DRAWING NUMBER: GB2248CI

DRAWN BY	DATE	CHK	SCALE		SIZE
JAD	9-18-00		3:8	SHT 1 OF 1	A

REV	DATE	BY	CHK	APR	DESCRIPTION	ECN
02A	3-7-17	TWV			UPDATED NOTES	GB2248CI
1	2-1-01	JAD			UPDATED GEOMETRY, RELEASED TO PRODUCTION	GB2248CI